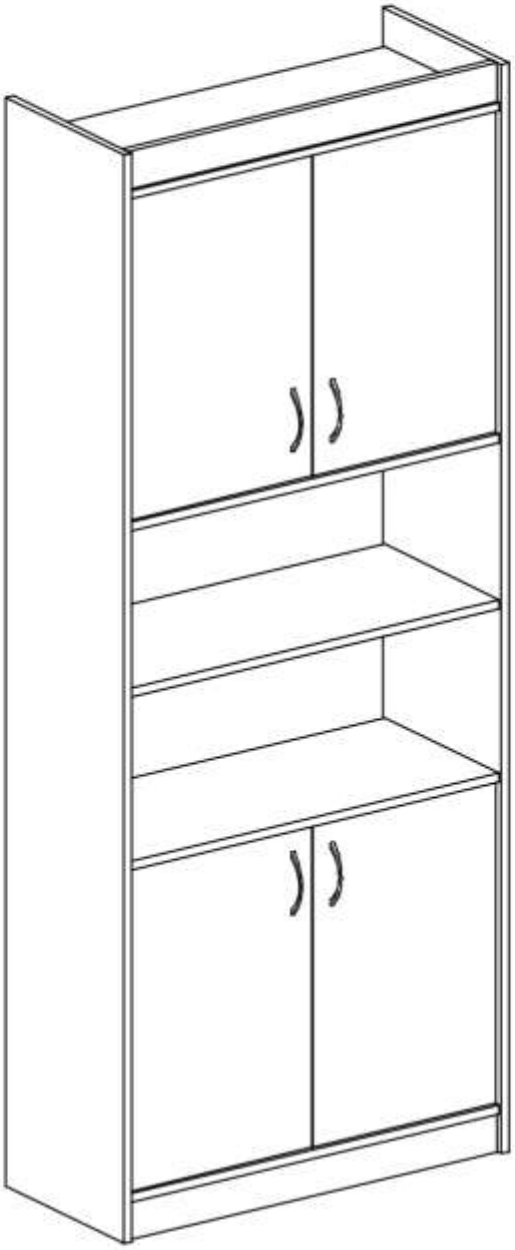

SYSTEM MEGA

ME 6

			T 12 x
P 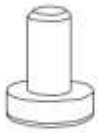 4 x	L 1 x	H 2000mm 1 x	M 4 x
B 20 x	D 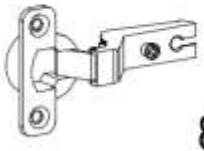 8 x	E 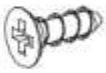 4 x 16 16 x	J 8 x
C 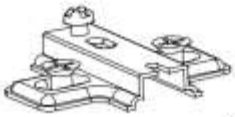 8 x	S 3 x 20 70 x	A 8 x	

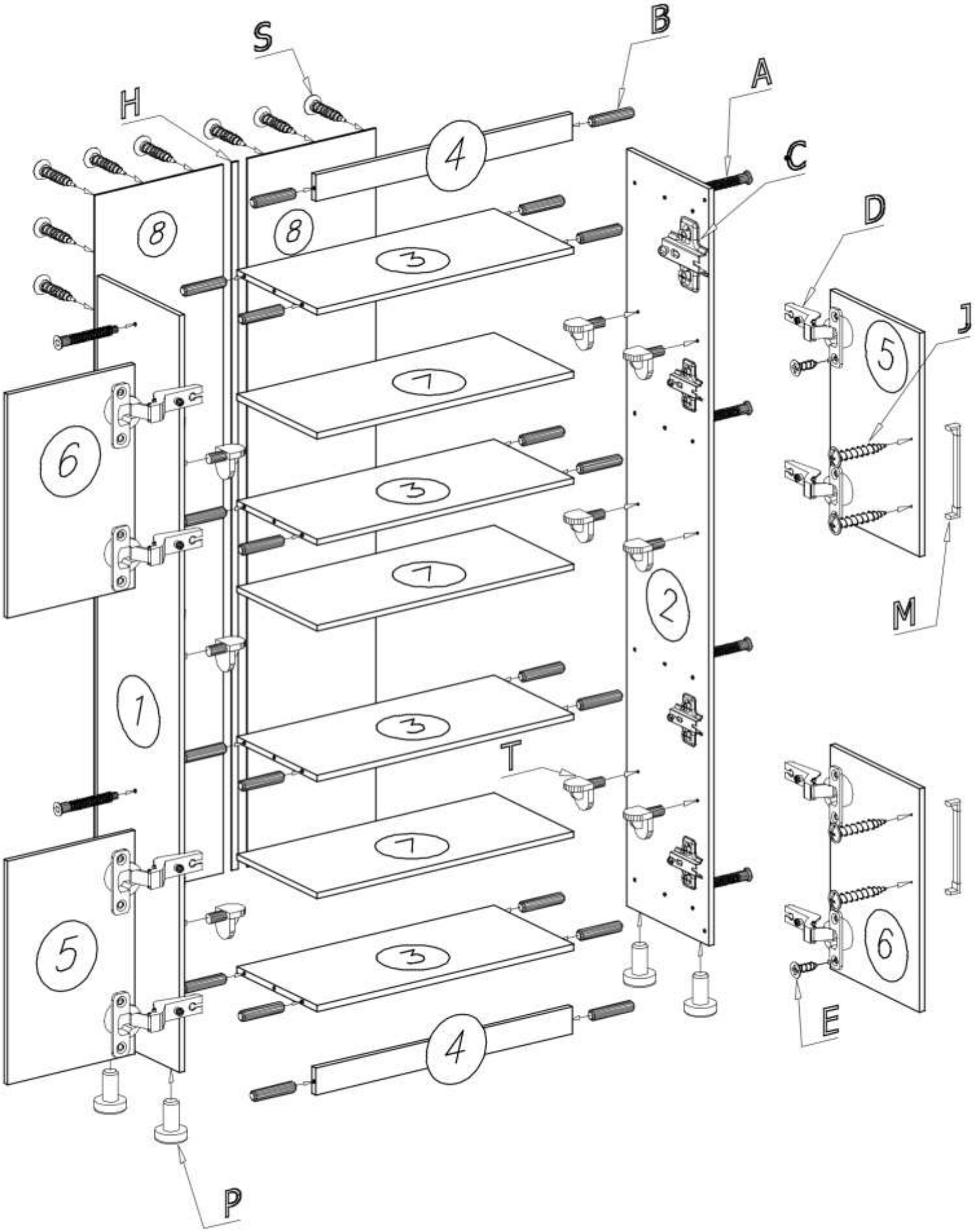
S
B
A
H
C
D
J
M
T
E
P
1
2
3
4
5
6
7
8